11/12/2025

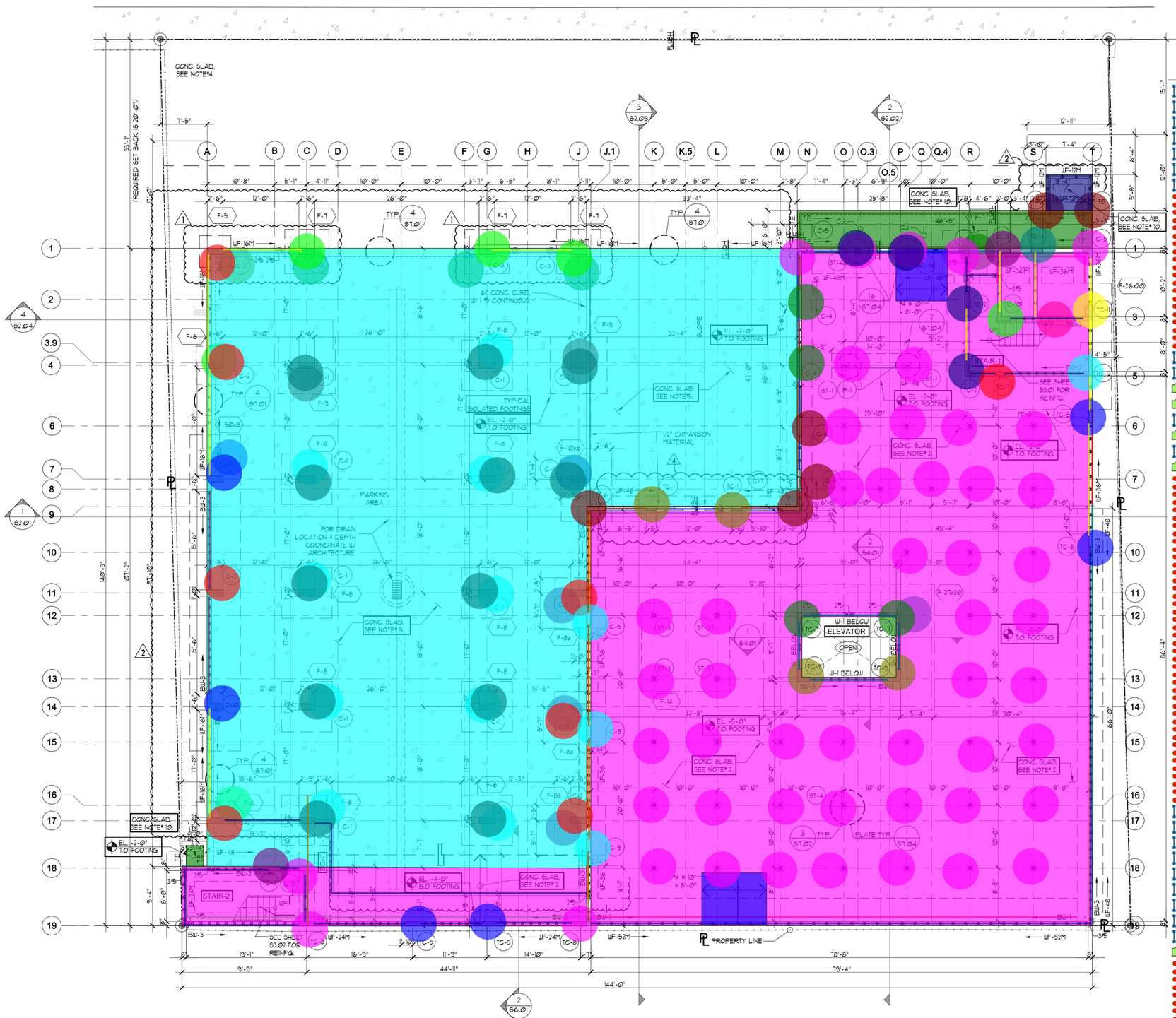

FOUNDATION AND GROUND FLOOR PLAN

SCALE : 1/8" = 1'-0"

MASONRY WALL FOUNDATION & GROUND FLOOR PLAN NOTES:

M1. SEE MASONRY NOTES ON FIRST LEVEL FOR WALL REINFORCING CONTINUING FROM FOUNDATION TO TOP OF PARAPET.

M2. MASONRY 8" NOMINAL THICKNESS TYPICAL, U.N.O. SEE ARCHITECTURAL.

M3. REINFORCE FIRST TWO CELLS ADJACENT TO WINDOW EACH SIDE WITH #5 BARS IN EACH CELL. CONTINUE REINFORCING TO TOP OF PARAPET.

M4. FOR ALL WALLS PROVIDE REINFORCED MASONRY W/ #5 @ 24" C/C, EXCEPT THOSE AS INDICATED ON THE PLAN. USE 3000 PSI GROUT MIX CONCRETE W/ 9" +/- 1" SLUMP.

Footing WF48	174.9 FT
Footing WF48M	24.4 FT
FOOTING WF52M	75.9 FT
FOOTING WF36	35.7 FT
FOOTING WF36M	37.3 FT
FOOTING WF24M	73.1 FT
WF16M	147.1 FT
F50 X 8	1.0 EA
F8	9.0 EA
F9	2.0 EA
F7	4.0 EA
F5	1.0 EA
F10 X 8	1.0 EA
F8A	3.0 EA
F 27 X 20	1.0 EA
F26 X 20	1.0 EA
F6	2.0 EA
8" Thk CMU Wall (2'H)	247.5 FT
8" CMU Wall (1'6"H)	94.3 FT
10" Thk COncrete Slab on Grade	7497.3 SQ FT
6" COncrete Slab on Grade	7240.6 SQ FT
T.E.	103.1 FT
4" Thk Concrete Slab	287.7 SQ FT
WF12M @ Trash	24.6 FT
4" THK COncrete Slab @ Trash	42.3 SQ FT
Column Type (C1)	12.0 EA
Column Type (C2)	7.0 EA
Column Type (C3)	3.0 EA
Column Type C10	2.0 EA
Column Type C5	4.0 EA
Column Type C9	3.0 EA
Column Type C6	4.0 EA
Column Type C4	2.0 EA
Column Type TC1	2.0 EA
Column Type TC2	2.0 EA
Column Type TC3	2.0 EA
Column Type TC4	1.0 EA
Column Type TC7	1.0 EA
Column Type TC10	1.0 EA
Column Type TC11	1.0 EA
Column Type TC5	4.0 EA
Column Type TC8	2.0 EA
Column Type TC2	1.0 EA
Column Type TC1 (6'H)	2.0 EA
Column TYpe TC7(17'H)	2.0 EA
Column Type TC9 (17'H)	2.0 EA
8" CMU Wall (12'H)(BW3)	226.9 FT
8" CMU Wall (12'H)(BW1)	63.7 FT
8" CMU Wall (12'H) Non Bearing	66.0 FT
8" CMU Wall (12'4"H)(BW3)	95.6 FT
8" CMU Wall (14'H) (BW1)	79.0 FT
8" CMU Wall (13'H)(BW3)	31.1 FT
8" CMU Wall (13'H)(BW1)	51.3 FT
8" CMU Wall (13'H)	25.7 FT
8" COncrete Wall @ Elevator (4'H)	42.2 FT
#4 @10"O.C.	151.7 SQ FT
Steel Column ST3(13'6"H)	4.0 EA
Steel Column ST1(13'6"H)	2.0 EA
Steel Column ST4a(13'6"H)	2.0 EA
Steel Column ST4(13'6"H)	37.0 EA
1" x 12" x 12" Steel Plate	2.0 EA
Concrete Beam SB1	20.3 FT

LEGEND:

MASONRY WALL
CONCRETE COLUMN
TIE-COLUMN
WF-M MONOLITHIC FOOTING OR ISOLATE FOOTING
SHEAR WALL
CONTROL JOINT
CONCRETE SLAB TO DESIGNATE THE PARKING AREA
STEEL COLUMNS
STRAP BEAM

Palenzuela & Hevia Design Group, Inc.
ARCHITECTURE
INTERIOR DESIGN
PLANNING
2201 S.W. 133 COURT
MIAMI, FLORIDA 33186
PHONE: (305) 969-5001
FAX: (305) 969-5002
AA-0003113 IB-0001056

JUAN FERNANDEZ-BARQUIN, P.E. # 40114
STATE OF FLORIDA
STRUCTURAL ENGINEER
JUAN FERNANDEZ-BARQUIN, P.E. # 40114
STATE OF FLORIDA
2520 N.W. 97th AVENUE, SUITE #240
DORAL, FLORIDA 33172
PHONE: 786-336-0861
FAX: 786-336-0864
E-MAIL: jfberq@bellsouth.net
www.juanfernandezbarquinpe.com

PROJECT:
SWEETWATER SELF STORAGE
10766 NW 14th Terrace, Sweetwater, FL 33172
IMC EQUITY GROUP
696 NE 125 St., North Miami, FL 33161

FOUNDATION & GROUND FLOOR PLAN

DESIGNED BY:	
DRAWN BY:	
CHECKED BY:	
SCALE:	AS NOTED
DATE:	04-04-2025
Job No.:	2024-3

NO.	DATE:	REVISION:
1	05-28-2024	BUILDING DEPARTMENT COMMENTS
2	08-04-2025	BUILDING DEPARTMENT COMMENTS
3	10-30-2025	REVISION

SHEET No.: S1.01 OF:

FILE NAME: S1.01

10_2025 PR

11/12/2025

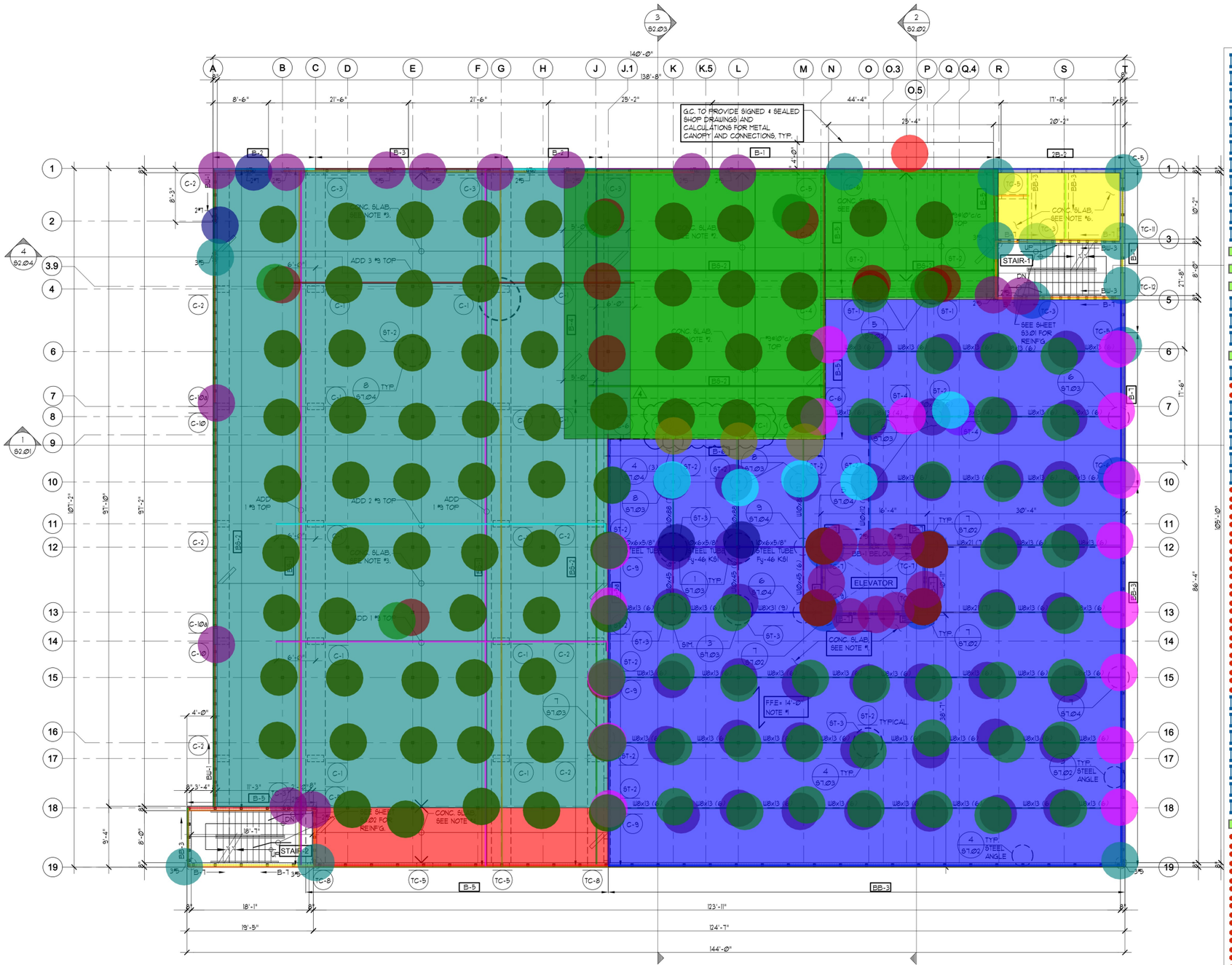

SECOND FLOOR FRAMING PLAN

SCALE : 1/8" = 1'-0"

MASONRY WALL SECOND FLOOR PLAN NOTES:

Concrete Beam (B5)	121.6 FT
Concrete Beam (BB3)	165.3 FT
Concrete Beam (B7)	165.9 FT
Concrete Beam (2B2)	19.9 FT
Concrete Beam (B1)	60.9 FT
Concrete Beam (B2)	30.2 FT
Concrete Beam (B3)	28.5 FT
Concrete Beam (BS2)	266.5 FT
Concrete Beam (BS1)	213.6 FT
Concrete Beam (B4)	36.6 FT
Concrete Beam (B5a)	66.2 FT
14" Thk COncrete Slab @ 1st Floor	6106.9 SQ FT
14" Thk COncrete Slab @ 1st Floor (4)	417.1 SQ FT
14" COncrete Slab (2)	1769.1 SQ FT
1 #9	266.3 FT
2#9	52.1 FT
3 #9	55.2 FT
#9 @10"O.C	2182.4 SQ FT
8" CMU Wall (9'H)(BW1)	96.4 FT
Column Type TC2	0.0 EA
8" CMU Wall (8'H)(BW2)	47.4 FT
8" CMU Wall (8'H)(BW3)	41.4 FT
8" CMU Wall (9'6"H)(BW2)	199.1 FT
8" CMU Wall (9'6"H))	90.7 FT
8" CMU Wall @ Elevator (8'H)	42.2 FT
Column Type (C2)	1.0 EA
Column Type (C10a)	2.0 EA
Column Type TC6	2.0 EA
Column Type TC5	2.0 EA
Column Type TC3(8'H)	2.0 EA
Column Type C5	1.0 EA
Column Type TC11	1.0 EA
Column Type TC7(8'H)	2.0 EA
Column Type TC9(8'H)	2.0 EA
Column Type TC12	1.0 EA
Steel Column ST2(30'H)	119.0 EA
Steel Column ST4(13'6"H)	2.0 EA
W8 x 13	425.4 FT
W8 x 21	22.4 FT
W8 x 31	12.8 FT
10 x 6 x 5/8" Steel Tube	32.9 FT
W10 x 112	20.6 FT
W10 x 45	30.5 FT
W10 x 88	50.2 FT
2", 18GA Composite Metal Deck (Vulcraft 2VL1)	6197.0 SQ FT
8/S7.03 BAse Plate	5.0 EA
1/4" x 14" x 10" Steel Cap (5/S7.03)	2.0 EA
1" x 8" x10" Steel Plate	110.0 EA
3/4" x 6" x 8" Plate	2.0 EA
1/4" x 4" x 4" Steel Plante	8.0 EA
3/4" x 14" x 22" Steel Plate	4.0 EA
3/4" x 10" x 10" Plate	15.0 EA
3/4" x 20" x 12" Steel Plate	3.0 EA
6"COncrete Slab	191.8 SQ FT
L5 x 5 x 1/2" Angle	165.5 FT
#5	NAN EA
2 #7	2.0 EA
2#5	19.0 EA
3#5	5.0 EA
(25'-4" x 3'-6") Metal Canopy	1.0 EA

Palenzuela Hevia Group, Inc.
ARCHITECTURE
INTERIOR DESIGN
PLANNING

STRUCTURAL ENGINEER
JUAN FERNANDEZ-BARQUIN, P.E. # 40114
STATE OF FLORIDA
2520 N.W. 97th AVENUE, SUITE #240
DORAL, FLORIDA 33172
PHONE: 786-336-0861,
FAX: 786-336-0864
E-MAIL: jfeng@bellsouth.net
www.juanfernandezbarquinpe.com

JUAN FERNANDEZ-BARQUIN, P.E.
40114
STATE OF FLORIDA

SWEETWATER SELF STORAGE
10766 NW 14th Terrace, Sweetwater, FL 33172

IMC EQUITY GROUP
696 NE 125 St., North Miami, FL 33161

BY:	
BY:	
SCALE:	AS NOTED
DATE:	04-04-2025
JOB NO.:	2024-3

DATE:	REVISION:
9-2025	REVISION

SHEET No.: S1.02 OF:

FILE NAME: S1.02

O:\2025 PROJECTS\

11/12/2025

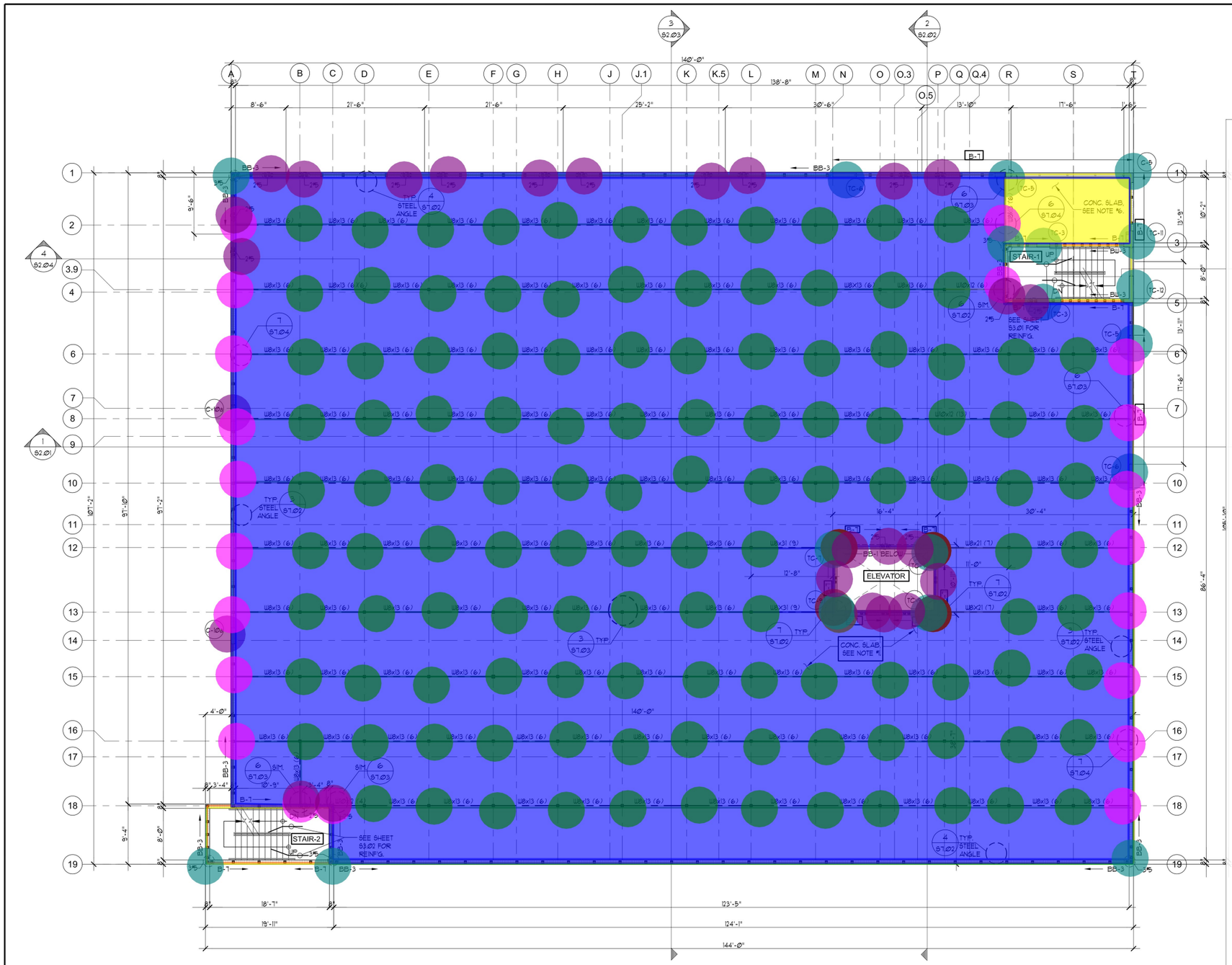

THIRD FLOOR FRAMING PLAN

SCALE : 1/8" = 1'-0"

LEGEND:

8" CMU Wall (9'H)(BW1)	0.0 FT
8" CMU Wall (9'H)(BW2)	93.0 FT
8" CMU Wall (8'H)(BW2)	38.8 FT
8" CMU Wall (8'H)(BW1)	26.5 FT
8" CMU Wall (9'6"H)(...	309.5 FT
8" CMU Wall @ Elevat...	41.8 FT
8" CMU Wall (8'H)(BW3)	33.2 FT
Column Type (C10a)(9'H)	2.0 EA
Column Type TC6	2.0 EA
Column Type TC5	2.0 EA
Column Type TC12	1.0 EA
Column Type TC11	1.0 EA
Column Type C5	1.0 EA
Column Type TC3(8'H)	2.0 EA
Concrete Beam (BB3)	398.6 FT
Concrete Beam (B7)	224.7 FT
W8 x 13	1268.8 FT
W10 x 12	9.2 FT
W8 x 31	25.4 FT
W8 x 21	22.4 FT
3/4" x 10" x 10" Plate	21.0 EA
1" x 8" x 10" Steel Plate	119.0 EA
L5 x 5 x 1/2" Angle	526.8 FT
1/4" x 4" x 4" Steel Plante	8.0 EA
3/4" x 14" x 22" Steel Pl...	4.0 EA
6"COncrete Slab	198.8 SQ FT
2", 18GA Compo...	14336.9 SQ FT
Column Type TC7(8'H)	2.0 EA
Column Type TC9(8'H)	2.0 EA
2#5	24.0 EA
3#5	5.0 EA

Palenzuela & Hevia Design Group, Inc.
ARCHITECTURE
INTERIOR DESIGN
PLANNING
01 S.W. 133 COURT
MI, FLORIDA 33186
ONE: (305) 969-5001
: (305) 969-5002
-0003113 IB-0001056

JUAN FERNANDEZ-BARQUIN, P.E.
STRUCTURAL ENGINEER P.E. # 40114
STATE OF FLORIDA CERTIFICATE OF AUTHORIZATION # 30007
2520 N.W. 97th AVENUE, SUITE #240
DORAL, FLORIDA 33172
PHONE: 786-336-0861,
FAX: 786-336-0864
E-MAIL: jfberg@bellsouth.net
www.juanfernandezbarquinpe.com

PROJECT:
SWEETWATER SELF STORAGE
10766 NW 14th Terrace, Sweetwater, FL 33172
IMC EQUITY GROUP
696 NE 125 St., North Miami, FL 33161

DRAWN BY:	
CHECKED BY:	
SCALE:	AS NOTED
DATE:	04-04-2025
JOB No.:	2024-3

DATE:	REVISION:

SHEET No.: S1.03 OF:

FILE NAME: S1.03

C:\2025 PROJECTS\P

11/12/2025

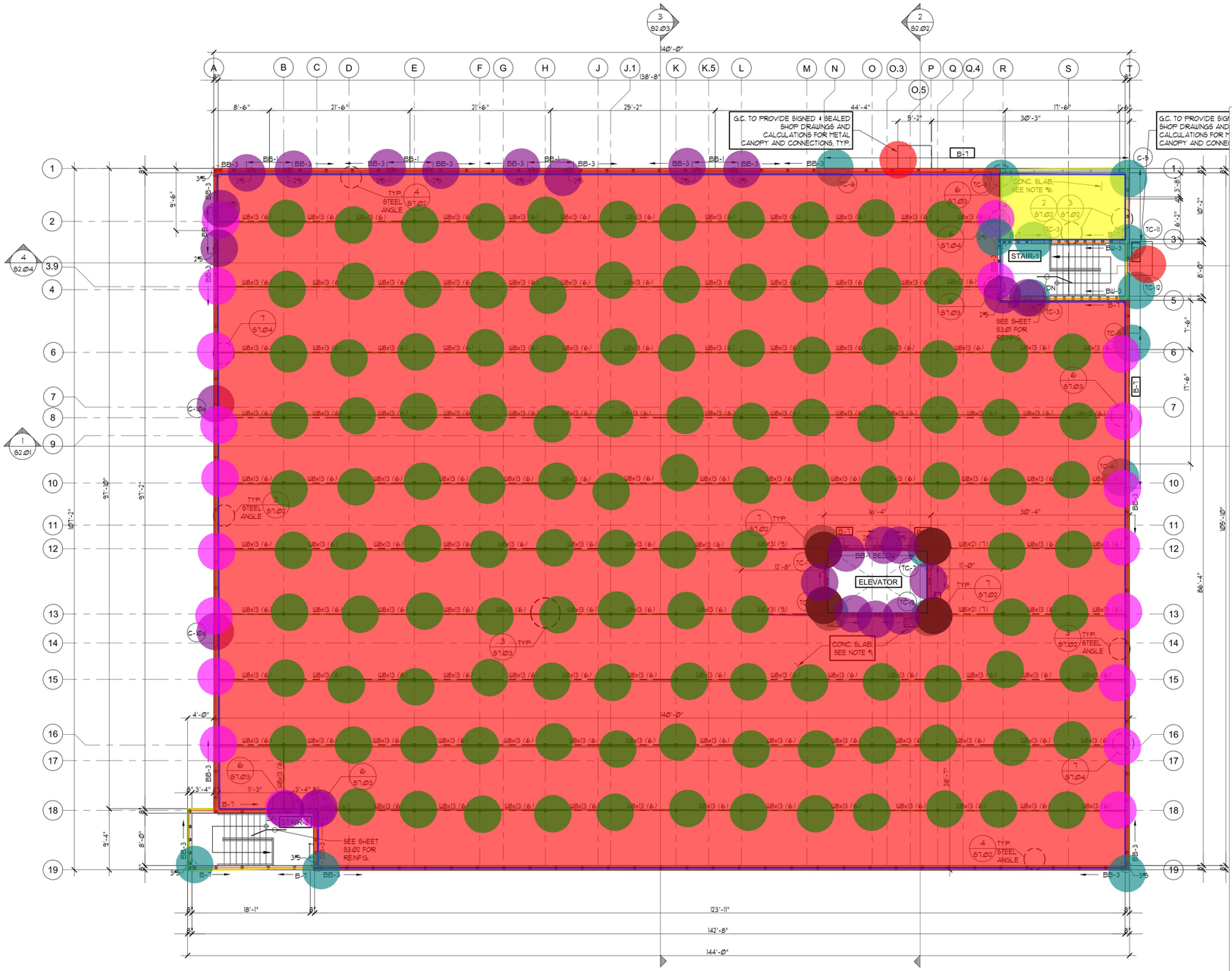

FOURTH FLOOR FRAMING PLAN

SCALE : 1/8" = 1'-0"

8" CMU Wall (9'10"H)...	406.9 FT
8" CMU Wall (8'H)(BW2)	39.0 FT
8" CMU Wall (8'H)(BW3)	28.4 FT
8" CMU Wall (8'H)(BW1)	31.1 FT
8" CMU Wall @ Elevat...	42.1 FT
Column Type (C10a)(9'...	2.0 EA
Column Type TC6	2.0 EA
Column Type TC5	2.0 EA
Column Type TC3(8'H)	2.0 EA
Column Type TC11	1.0 EA
Column Type TC12	1.0 EA
Column Type C5	1.0 EA
Column Type TC7(8'H)	2.0 EA
Column Type TC9(8'H)	2.0 EA
Concrete Beam (BB3)	400.1 FT
Concrete Beam (B7)	223.4 FT
W8 x 13	1277.8 FT
W8 x 31	25.4 FT
W8 x 21	22.9 FT
3/4" x 10" x 10" Plate	21.0 EA
1" x 8" x 10" Steel Plate	119.0 EA
3/4" x 14" x 22" Steel Pl...	4.0 EA
1/4" x 4" x 4" Steel Plante	8.0 EA
L5 x 5 x 1/2" Angle	528.0 FT
6"COncrete Slab	192.7 SQ FT
2", 18GA Compo...	14336.9 SQ FT
2#5	22.0 EA
3#5	4.0 EA
(5'-2" x 3'-6") Metal Can...	2.0 EA

Palenzuela & Hevia Design Group, Inc.
ARCHITECTURE
INTERIOR DESIGN
PLANNING
S.W. 133 COURT
FLORIDA 33186
(305) 969-5001
(305) 969-5002
AA-03113 IB-0001056

STRUCTURAL ENGINEER
JUAN FERNANDEZ-BARQUIN, P.E. # 40114
STATE OF FLORIDA
2520 N.W. 97th AVENUE, SUITE #240
DORAL, FLORIDA 33172
PHONE: 786-336-0861,
FAX: 786-336-0864
E-MAIL: jfeng@bellsouth.net
www.juanfernandezbarquinpe.com

SWEETWATER SELF STORAGE
10766 NW 14th Terrace, Sweetwater, FL 33172
IMC EQUITY GROUP
696 NE 125 St., North Miami, FL 33161

DRAWN BY:	
CHECKED BY:	
SCALE:	AS NOTED
DATE:	04-04-2025
JOB NO.:	2024-3

DATE:	REVISION:

SHEET No.: S1.04 OF:
FILE NAME: S1.04

C:_2025 PROJECTS\PALENZUELA & H

11/12/2025

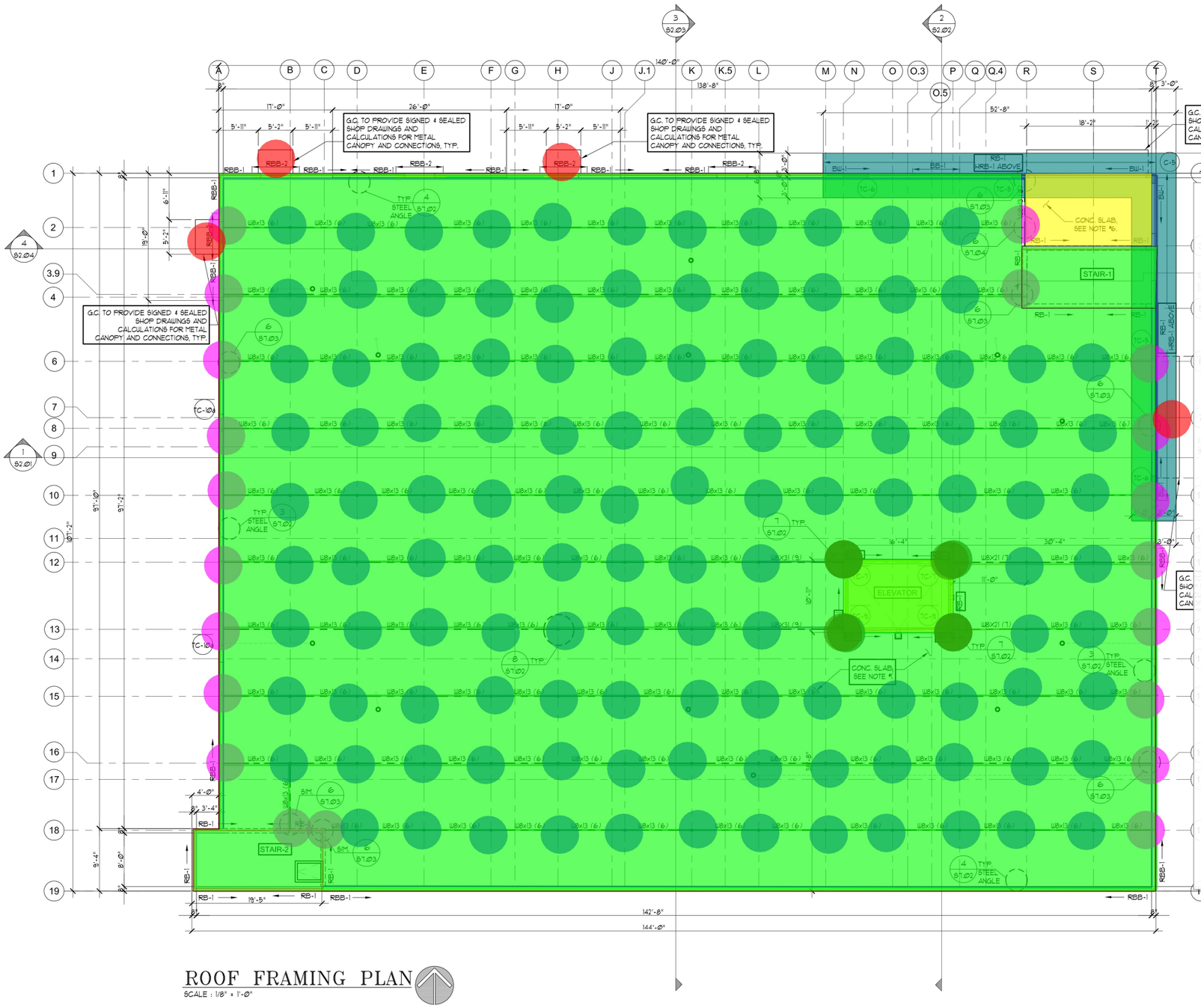

ROOF FRAMING PLAN

SCALE : 1/8" = 1'-0"

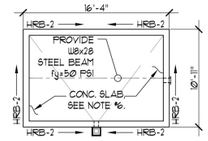

ROOF ELEVATOR PLAN

SCALE : 1/8" = 1'-0"

Concrete Beam RB1	253.5 FT
Concrete BEam RBB1	348.3 FT
Concrete BEam RBB2	34.3 FT
Concrete Beam (BB1)	7.2 FT
COncrete BEam HRB1	97.8 FT
W8 x 13	1279.6 FT
W8 x 31	27.0 FT
W8 x 21	23.6 FT
8" CMU Wall (4'2"H)	101.0 FT
2 x 12 No 2 P.T. Pine @24"...	673.8 SQ FT
8" CMU Wall (3'H)	400.0 FT
8" CMU Wall (2'8"H)	52.5 FT
6"COncrete Slab	383.5 SQ FT
L5 x 5 x 1/2" Angle	426.9 FT
3/4" x 10" x 10" Plate	21.0 EA
3/4" x 14" x 22" Steel Plate	4.0 EA
1/4" x 4" x 4" Steel Plante	8.0 EA
3/4" x 9" x 9" Steel Cap PLate	119.0 EA
2", 18GA Composite Met...	14804.8 SQ FT
(5'-2" x 3'-6") Metal Canopy	3.0 EA
(18'-2" x 3'-6") Metal Canopy	1.0 EA

LOAD DESIGN:

LIVE LOAD = 30 PSF

DEAD LOAD = 25 PSF

SYMBOL LEGEND:

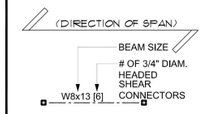

Palenzuela & Hevia Design Group, Inc.
ARCHITECTURE
INTERIOR DESIGN
PLANNING

12201 S.W. 133 COURT
MIAMI, FLORIDA 33186
TEL: 305-969-5001
FAX: 786-336-0884
E-MAIL: jfreg@bellsouth.net
www.juanfernandezbarquinpe.com
JUAN FERNANDEZ-BARQUIN, P.E.
FLA. LIC. #45414

IMC EQUITY GROUP
696 NE 125 St., North Miami, FL 33161

DESIGNED BY:	
DRAWN BY:	
CHECKED BY:	
SCALE:	AS NOTED
DATE:	04-04-2025
JOB No.:	2024-3

△	DATE:	REVISION:

SHEET No.: S1.05 OF:

FILE NAME: S1.05

C:_2025 PROJECTS\PALENZUELA & HEVIA\Sweetwater Self Storage\STRUCTURES\S1.01 – S

11/12/2025

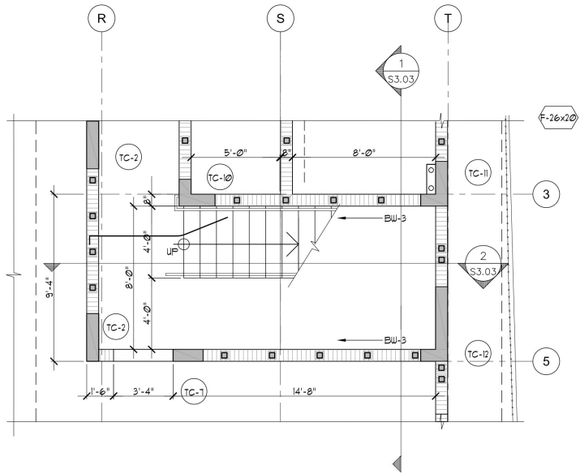

STAIR #1
GROUND FLOOR STAIR PLAN
SCALE: 1/4"=1'-Ø"
1 S3.01

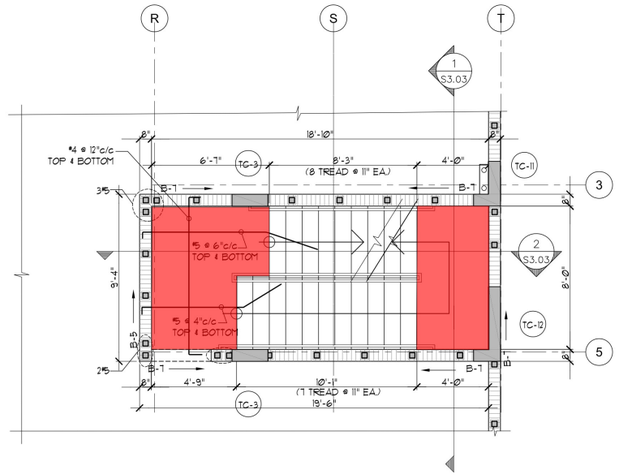

STAIR #1
SECOND FLOOR STAIR PLAN
SCALE: 1/4"=1'-Ø"
2 S3.01

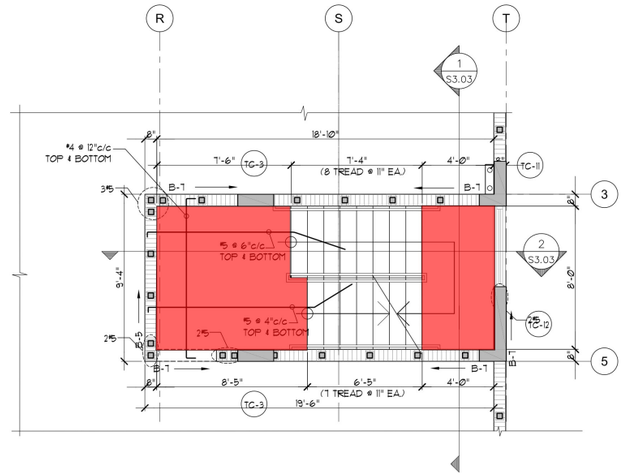

STAIR #1
THIRD FLOOR STAIR PLAN
SCALE: 1/4"=1'-Ø"
3 S3.01

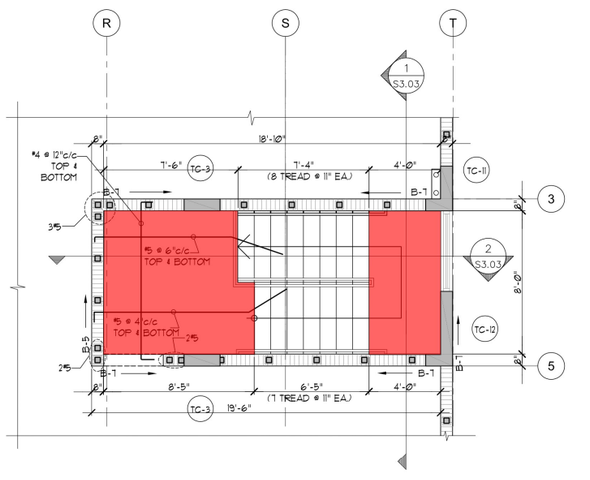

STAIR #1
FOURTH FLOOR STAIR PLAN
SCALE: 1/4"=1'-Ø"
4 S3.03

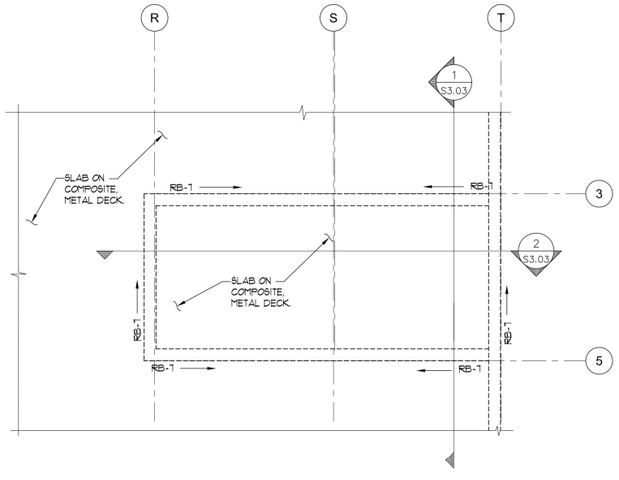

STAIR #1
ROOF STAIR PLAN
SCALE: 1/4"=1'-Ø"
5 S3.03

6" Thk COncrete Slab @ Stairr1 **270.9 SQ FT**

Palenzuela & Hevia Design Group, Inc.
ARCHITECTURE
INTERIOR DESIGN
PLANNING

12201 S.W. 133 COURT
MIAMI, FLORIDA 33186
PHONE: (305) 969-5001
FAX: (305) 969-5002
AA-0003113 IB-0001056

SEAL
JUAN FERNANDEZ-BARQUIN, P.E. # 40114

CONSULTANT
JUAN FERNANDEZ-BARQUIN, P.E.
STRUCTURAL ENGINEER
FLORIDA REGISTRATION # 40114
2520 N.W. 97th AVENUE, SUITE #240
DORAL, FLORIDA 33172
PHONE: 786-336-0861,
FAX: 786-336-0864
E-MAIL: jfberq@bellsouth.net
www.juanfernandezbarquinpe.com

DRAWING: STAIR #1 PLANS
PROJECT: SWEETWATER SELF STORAGE
10766 NW 14th Terrace, Sweetwater, FL 33172
IMC EQUITY GROUP
696 NE 125 St., North Miami, FL 33161

DESIGNED BY:	
DRAWN BY:	
CHECKED BY:	
SCALE:	AS NOTED
DATE:	04-04-2025
JOB No.:	2024-3

△	DATE:	REVISION:

SHEET No.: S3.01 OF:
FILE NAME: S3.01

C:_2025 PROJECTS\PALENZUELA & HEVIA\Sweetwater Self Storage\STRUCTURE\S3.01 & S3.02 STAIRS #1 & #2.dwg

11/12/2025

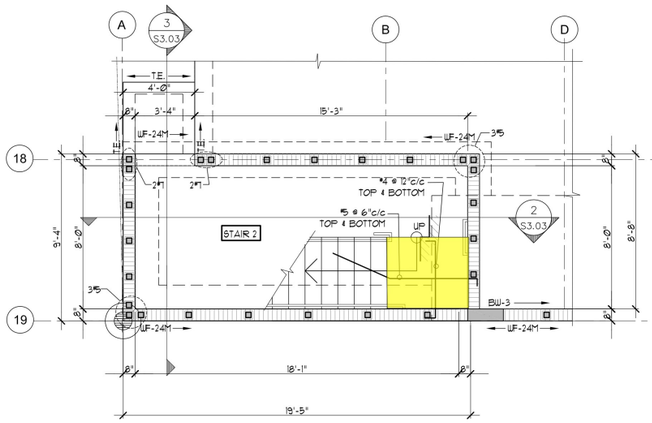

STAIR #2
GROUND FLOOR STAIR PLAN 1 S3.02
SCALE: 1/4"=1'-Ø"

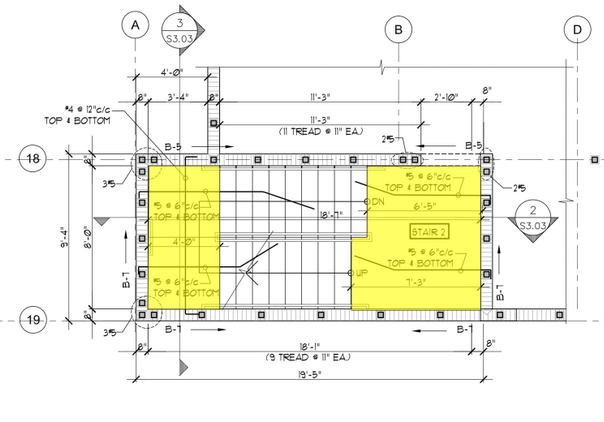

STAIR #2
SECOND FLOOR STAIR PLAN 2 S3.02
SCALE: 1/4"=1'-Ø"

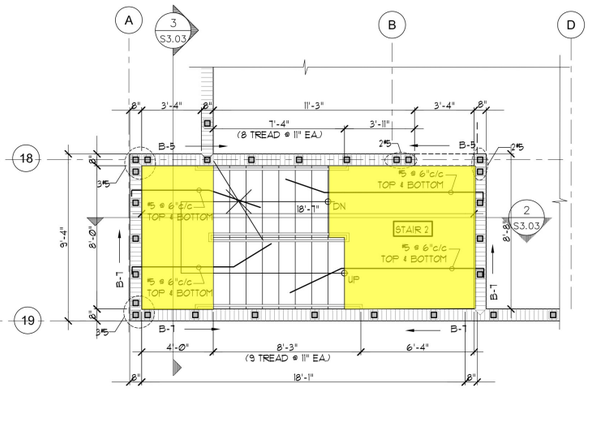

STAIR #2
THIRD FLOOR STAIR PLAN 3 S3.02
SCALE: 1/4"=1'-Ø"

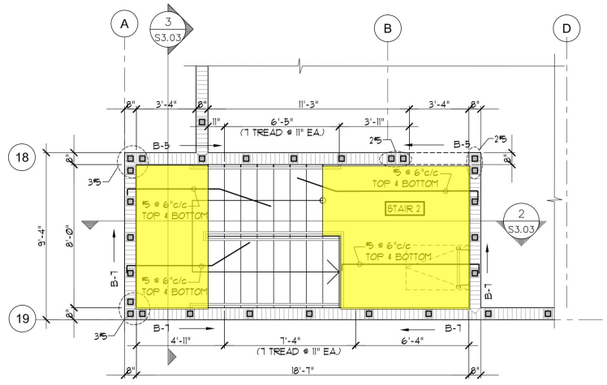

STAIR #2
FOURTH FLOOR STAIR PLAN 4 S3.02
SCALE: 1/4"=1'-Ø"

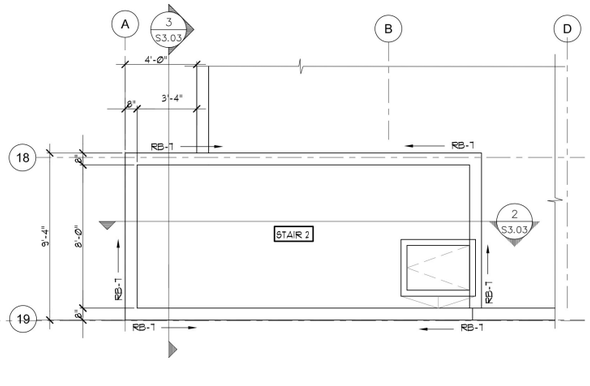

STAIR #2
ROOF STAIR PLAN 5 S3.02
SCALE: 1/4"=1'-Ø"

6" Thk Concrete SLab ... **293.4 SQ FT**

Palenzuela & Hevia Design Group, Inc.
ARCHITECTURE
INTERIOR DESIGN
PLANNING

12201 S.W. 133 COURT
MIAMI, FLORIDA 33186
PHONE: (305) 969-5001
FAX: (305) 969-5002
AA-0003113 IB-0001056

SEAL
JUAN FERNANDEZ-BARQUIN, P.E. # 40114

CONSULTANT
JUAN FERNANDEZ-BARQUIN, P.E.
STRUCTURAL ENGINEER
FLORIDA REGISTRATION NUMBER # 40114
2520 N.W. 97th AVENUE, SUITE #240
DORAL, FLORIDA 33172
PHONE: 786-336-0861,
FAX: 786-336-0864
E-MAIL: jfberq@bellsouth.net
www.juanfernandezbarquinpe.com

DRAWING: STAIR #2 PLANS
PROJECT: SWEETWATER SELF STORAGE
10766 NW 14th Terrace, Sweetwater, FL 33172
IMC EQUITY GROUP
696 NE 125 St., North Miami, FL 33161

DESIGNED BY:	
DRAWN BY:	
CHECKED BY:	
SCALE:	AS NOTED
DATE:	04-04-2025
JOB No.:	2024-3

△	DATE:	REVISION:

SHEET No.: S3.02 OF:
FILE NAME: S3.02

C:_2025 PROJECTS\PALENZUELA & HEVIA\Sweetwater Self Storage\STRUCTURE\S3.01 & S3.02 STAIRS #1 & #2.dwg